TW-R50-B128
HF Tag

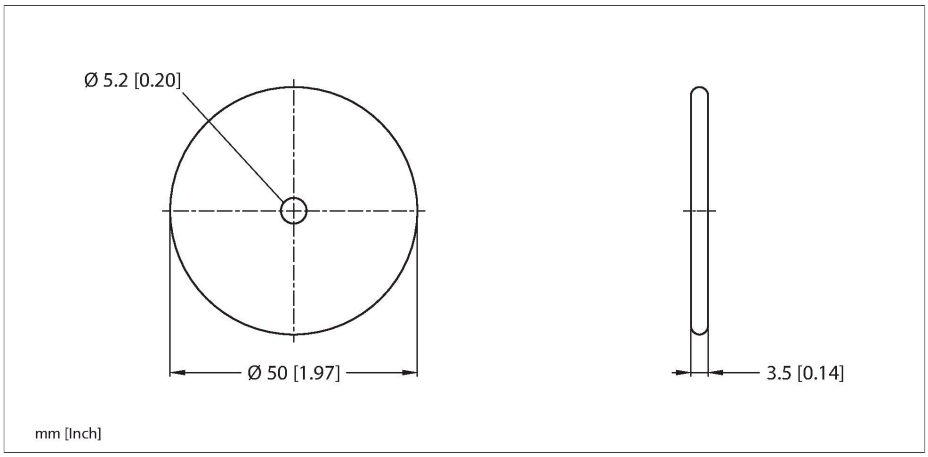

Technical data

Type	TW-R50-B128
ID	6900504
Remark to product	Not suitable for direct mounting on metal
Data transfer	Inductive coupling
Technology	HF RFID
Operating frequency	13.56 MHz
Memory type	EEPROM
Chip	NXP I-Code SLI-X
Memory	128 Byte
Memory	Read/Write
Freely usable memory	112 Byte
Number of read operations	unlimited
Number of write operations	10^5
Typical read time	2 ms/Byte
Typical write time	3 ms/Byte
Radio communication and protocol standards	ISO 15693 NFC Typ 5
Minimum distance to metal	10 mm
Temperature during read/write access	-40…+85 °C
Temperature outside detection range	-45…+85 °C
	140 °C, 1 × 100 h
Design	Hard tag, R50
Diameter	50 mm +/- 0.5 mm
Internal diameter	5.2 mm +/- 0.3 mm
Housing height	3.5 mm +/- 0.5 mm
Housing material	Plastic, PA6
Active area material	Plastic, PA6, black
Protection class	IP69K

Features

- The tags must undergo adequate stress tests within the proposed temperature processes before deployment.
- The following stress test was performed on this tag:
  Cyclic temperature stress: 5 min at -40 °C – 5 min at 90 °C
  Number of tested cycles: 100, transition period: 30 seconds
  Continuous load: 140 °C for 100 hours
- This successfully performed test does not imply suitability for a specific application, but merely serves as proof of the basic usability.
- EEPROM, memory 128 byte
- Not for direct mounting on metal

Functional principle

The HF read/write devices operating at a frequency of 13.56 MHz form a transmission zone the size of which (0…500 mm) varies, depending on the combination of read/write head and tag used.
The read/write distances mentioned here only represent standard values measured under laboratory conditions, free from any influences caused by surrounding materials.
The read/write distances of tags suitable for mounting in/on metal were determined in/on metal.
Attainable distances may vary by up to 30 % due to component tolerances, mounting conditions, ambient conditions and material qualities (especially when mounted in metal).
Testing of the application under real operating conditions is therefore essential, especially with on-the-fly reading and writing!

TW-R50-B128 | 29-07-2024 11-44 | Technical modifications reserved

Technical data

Packaging unit	1

TW-R50-B128| 29-07-2024 11-44 | Technical modifications reserved