Inductive sensor
For harsh environments
Bi12-EM30WD-AP6X-H1141

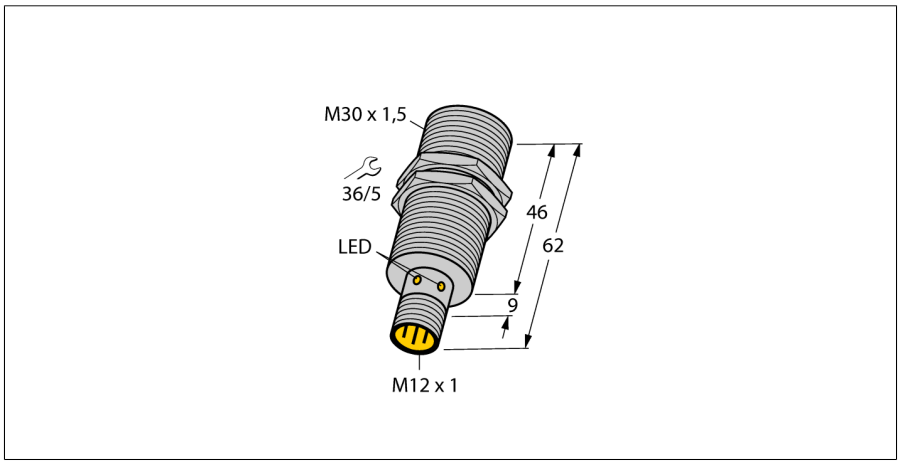

- **Threaded barrel, M30 x 1.5**
- **Stainless steel, 1.4301**
- **Protection classes IP68 - IP69K**
- **PVDF front cap**
- **Resistant to cleaning agents**
- **Resistance to cooling lubricants, cutting and grinding oils**
- **Viton O-ring seal**
- **For the food industry**
- **DC 3-wire, 10…30 VDC**
- **NO contact, PNP output**
- **M12 x 1 male connector**

Type code	Bi12-EM30WD-AP6X-H1141
Ident no.	4614541
Rated switching distance Sn	12 mm
Mounting conditions	flush
Assured switching distance	≤ (0,81 x Sn) mm
Correction factors	St37 = 1; Al = 0.3; stainless steel = 0.7; Ms = 0.4
Repeatability	≤ 2 % of full scale
Temperature drift	≤ ± 10 %
Hysteresis	3…15 %
Ambient temperature	-25…+85 °C
Operating voltage	10…30VDC
Residual ripple	≤ 10 % U_{ss}
DC rated operational current	≤ 200 mA
No-load current I_0	≤ 15 mA
Residual current	≤ 0.1 mA
Rated insulation voltage	≤ 0.5 kV
Short-circuit protection	yes/ cyclic
Voltage drop at I_e	≤ 1.8 V
Wire breakage / Reverse polarity protection	yes/ complete
Output function	3-wire, NO contact, PNP
Switching frequency	1 kHz
Construction	threaded barrel, M30 x 1.5
Dimensions	62 mm
Housing material	stainless steel, V2A (1.4301)
Material active area	plastic, PVDF
Admissible pressure on front cap	≤ 10 bar
Max. tightening torque housing nut	75 Nm
Connection	male, M12 x 1
Vibration resistance	55 Hz (1 mm)
Shock resistance	30 g (11 ms)
IP Rating	IP68 / IP69K
MTTF	2283 years acc. to SN 29500 (Ed. 99) 40 °C
Switching state	LED yellow

Wiring diagram

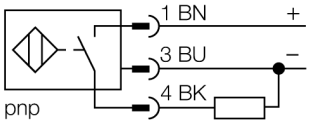

Functional principle

TURCK offers leak-proof sensors for the food industry and machine engineering that are resistant to cleaning agents, cooling lubricants, cutting and grinding oils. They are made for rough environmental conditions and not only meet but even exceed the requirements of the protection classes IP68 and IP69. These rugged sensors are protected by a PVDF front cap, a special Viton seal and a stainless steel housing.

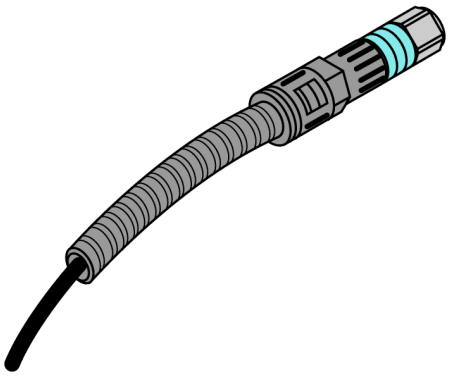

Edition • 2015-07-28T00:46:41+02:00

Distance D	2 x B
Distance W	3 x Sn
Distance T	3 x B
Distance S	1.5 x B
Distance G	6 x Sn

Diameter of the active area B	Ø 30 mm

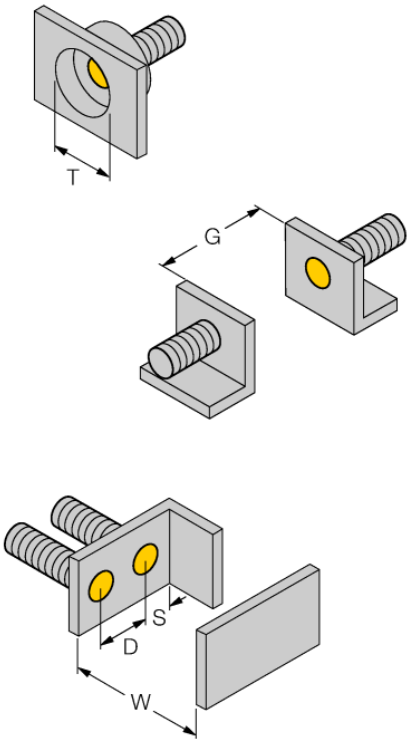

Edition • 2015-07-28T00:46:41+02:00

Accessories

Type code	Ident no.	Description	Design
MW-30	6945005	Mounting bracket for threaded barrel devices; material: Stainless steel A2 1.4301 (AISI 304)	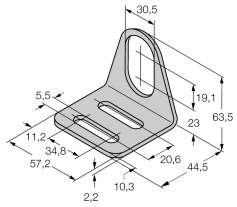
BSS-30	6901319	Mounting bracket for smooth and threaded barrel devices; material: Polypropylene	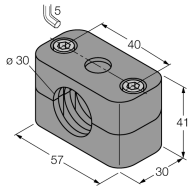

Edition • 2015-07-28T00:46:41+02:00