Inductive sensor
Bi10-M30-RZ3X

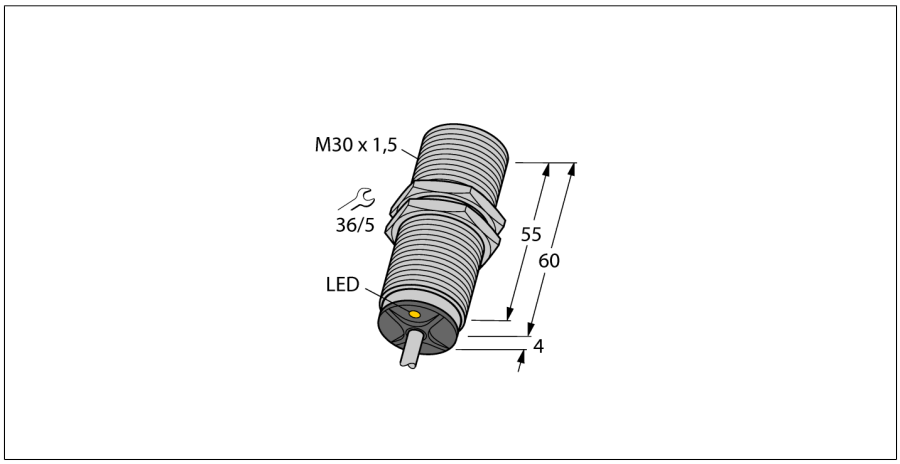

- **Threaded barrel, M30 x 1.5**
- **Chrome-plated brass**
- **AC 2-wire, 20…250 VDC**
- **DC 2-wire, 10…300 VDC**
- **NC contact**
- **Cable connection**

Wiring diagram

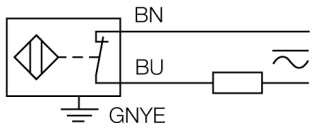

Type code	Bi10-M30-RZ3X
Ident no.	43166
Rated switching distance Sn	10 mm
Mounting conditions	flush
Assured switching distance	≤ (0,81 x Sn) mm
Correction factors	St37 = 1; Al = 0.3; stainless steel = 0.7; Ms = 0.4
Repeatability	≤ 2 % of full scale
Temperature drift	≤ ± 10 %
Hysteresis	3…15 %
Ambient temperature	-25…+70 °C
Operating voltage	20…250 VAC
Operating voltage	10…300VDC
AC rated operational current	≤ 400 mA
DC rated operational current	≤ 300 mA
Frequency	≥ 50…≤ 60 Hz
Residual current	≤ 1.7 mA
Rated insulation voltage	≤ 1.5 kV
Surge current	≤ 8 A (≤ 10 ms max. 5 Hz)
Voltage drop at I_e	≤ 6 V
Output function	2-wire, NC contact
Smallest operating current I_m	≥ 3 mA
Switching frequency	0.02 kHz
Construction	threaded barrel, M30 x 1.5
Dimensions	64 mm
Housing material	metal, CuZn, chrome-plated
Material active area	plastic, PA
End cap	Plastic, EPTR
Max. tightening torque housing nut	75 Nm
Connection	cable
Cable quality	5.2 mm, LifYY, PVC, 2m
Cable cross section	3 x 0.5 mm^2
Vibration resistance	55 Hz (1 mm)
Shock resistance	30 g (11 ms)
IP Rating	IP67
MTTF	2283 years acc. to SN 29500 (Ed. 99) 40 °C
Switching state	LED red

Functional principle

Inductive sensors detect metal objects contactless and wear-free. For this, they use a high-frequency electromagnetic AC field that interacts with the target. Inductive sensors generate this field via an RLC circuit with a ferrite coil.

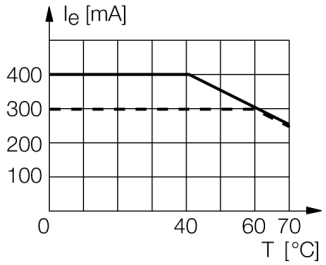

Edition • 2015-07-27T23:44:18+02:00

Hans Turck GmbH & Co.KG ● D-45472 Mülheim an der Ruhr ● Witzlebenstraße 7 ● Tel. 0208 4952-0 ● Fax 0208 4952-264 ● more@turck.com ● www.turck.com

Distance D	2 x B
Distance W	3 x Sn
Distance T	3 x B
Distance S	1.5 x B
Distance G	6 x Sn

Diameter of the active area B	Ø 30 mm

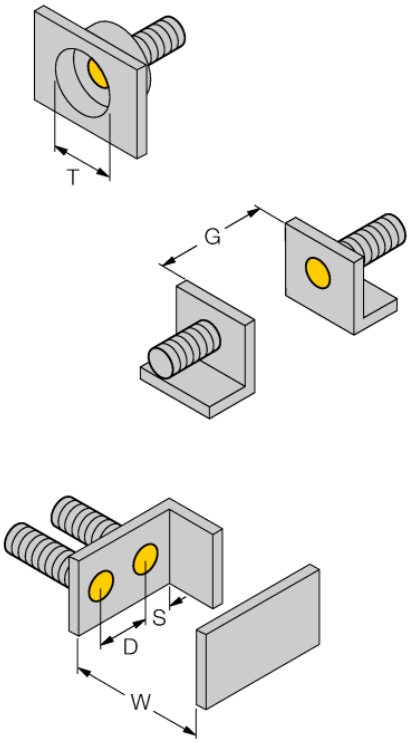

Edition • 2015-07-27T23:44:18+02:00

Accessories

Type code	Ident no.	Description	Design
BST-30B	6947216	Fixing clamp for threaded barrel devices, with dead-stop; material: PA6	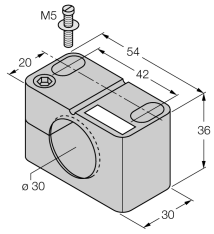
QM-30	6945103	Quick-mount bracket with dead-stop; material: Chrome-plated brass Male thread M36 x 1.5. Note: The switching distance of proximity switches can be reduced by the use of quick-mount brackets.	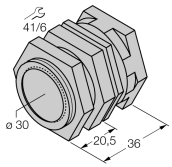
MW-30	6945005	Mounting bracket for threaded barrel devices; material: Stainless steel A2 1.4301 (AISI 304)	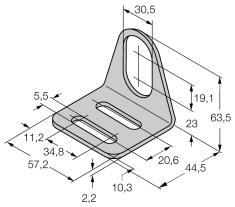
BSS-30	6901319	Mounting bracket for smooth and threaded barrel devices; material: Polypropylene	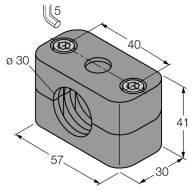

Edition • 2015-07-27T23:44:18+02:00

 Hans Turck GmbH & Co.KG ● D-45472 Mülheim an der Ruhr ● Witzlebenstraße 7 ● Tel. 0208 4952-0 ● Fax 0208 4952-264 ● more@turck.com ● www.turck.com